eduard MASK

CX 543

The die-cut mask for accurate painting

Su-7BMK

for kit **MODELSVIT**

scale 1/72

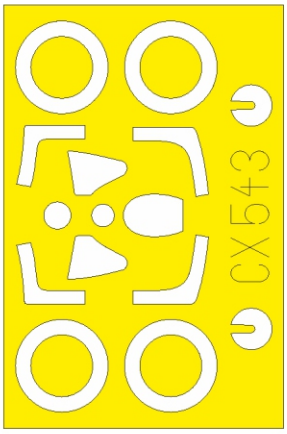

1.)

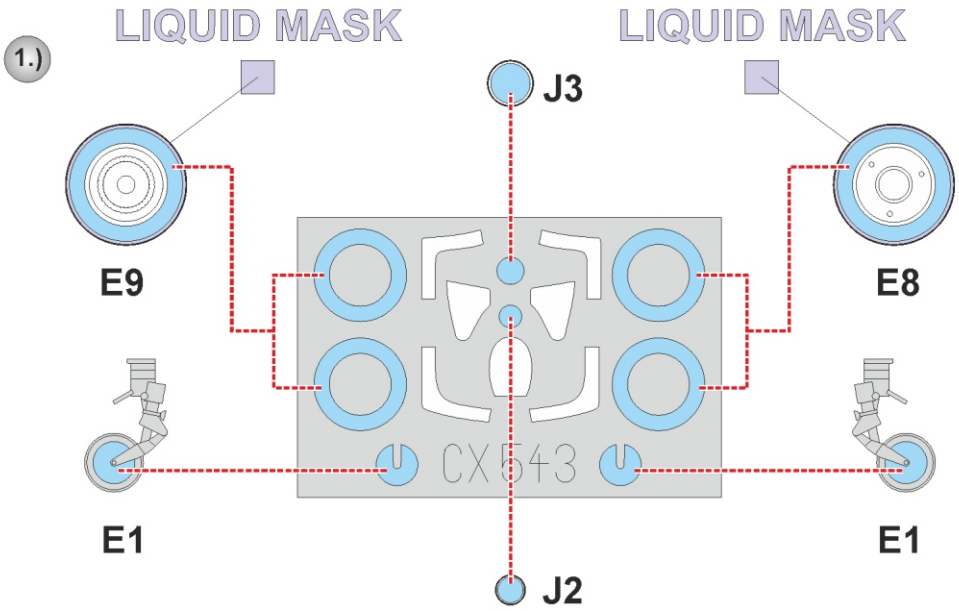

2.)

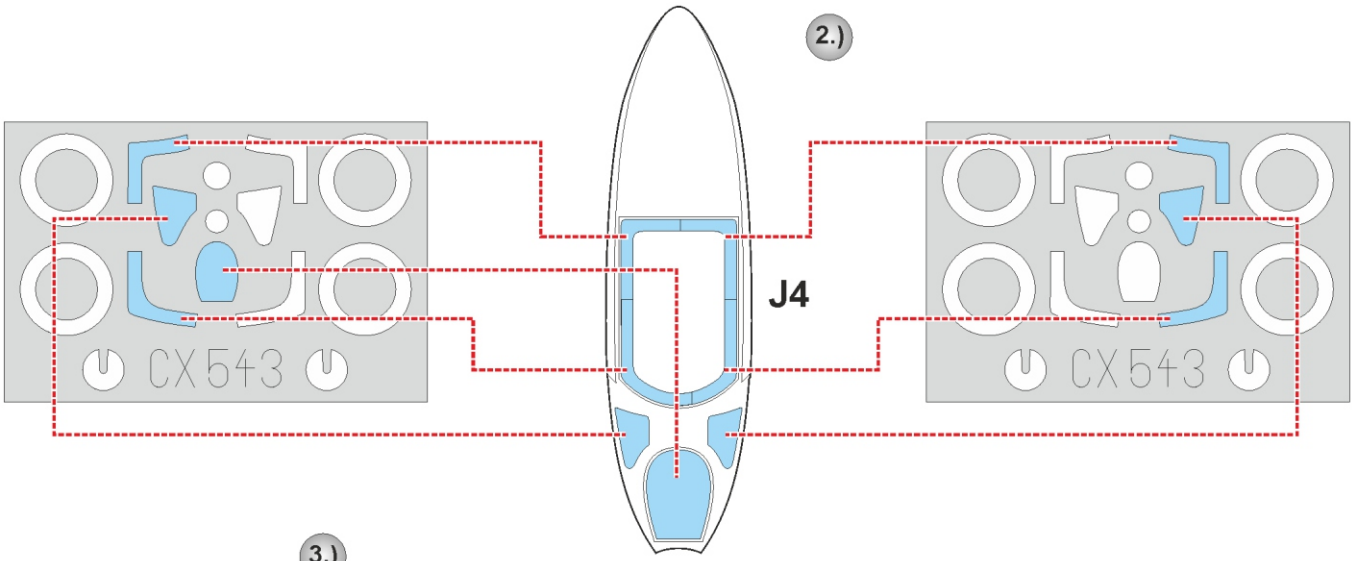

3.)

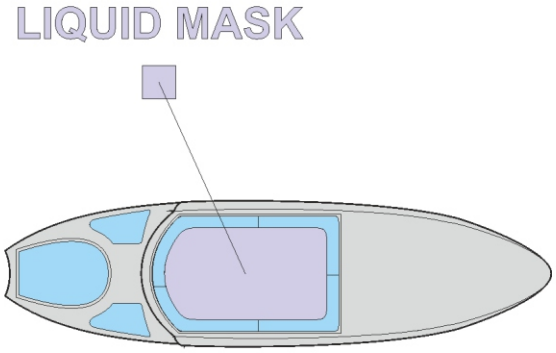

4.)

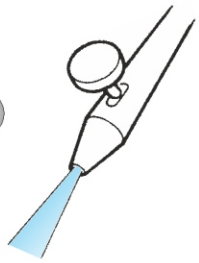

© Eduard - Model Accessories 2019